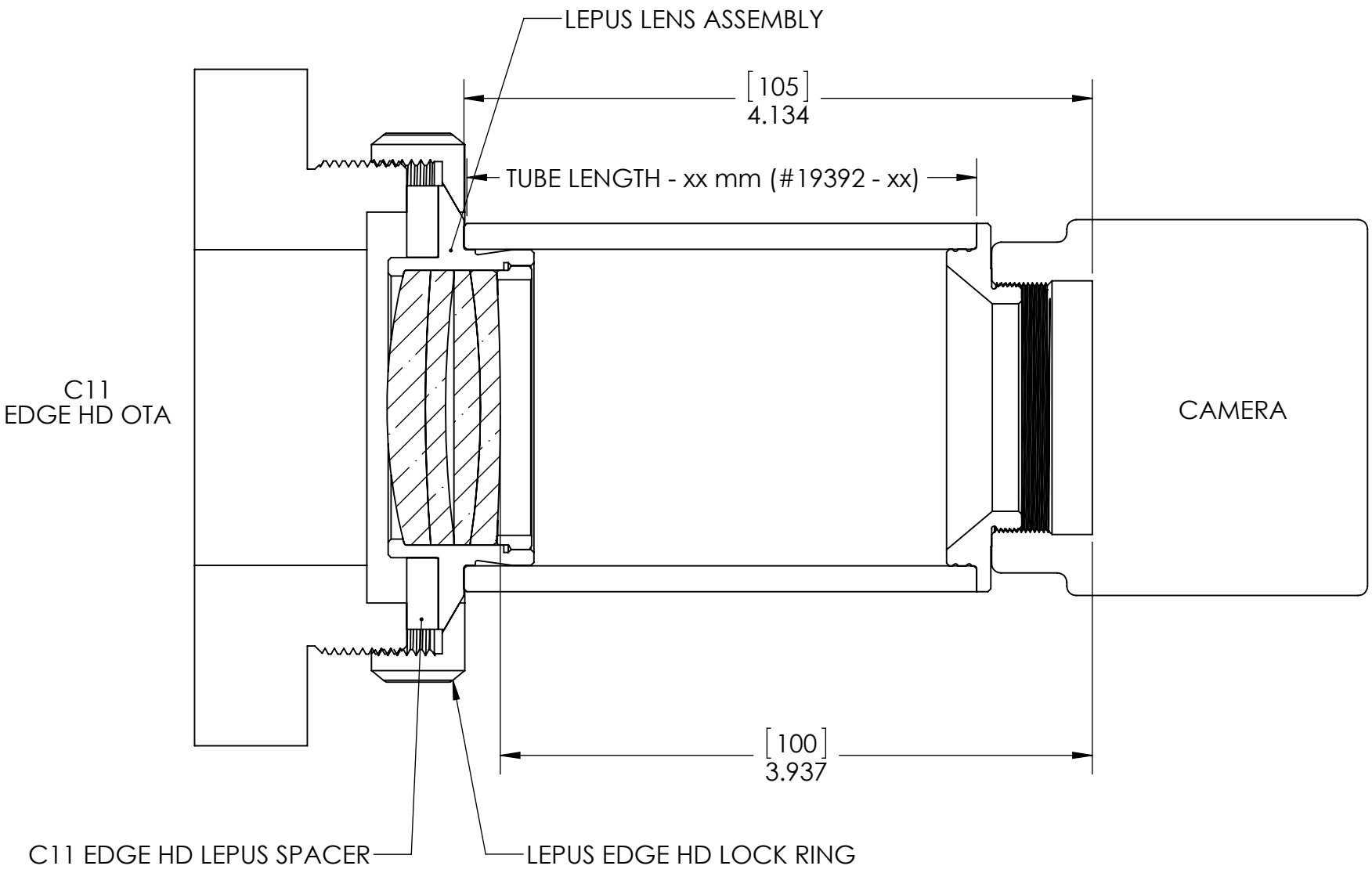
LEPUS LENS ASSEMBLY
[105]
4.134
TUBE LENGTH - xx mm (#19392 - xx)
C11
EDGE HD OTA
CAMERA
[100]
3.937
C11 EDGE HD LEPUS SPACER
LEPUS EDGE HD LOCK RING